172×150×51mm

AC Axial-Flow Fan

★General Specification(一般规格）

☆Material: Lmpeller:Thermal Plastic UL 94V–0
Frame:Aluminium Alloy

☆Lead Wires:UL Type

☆Motor Protection:Lmpedance Protected

☆Insulation Resistance:10MΩ Or Over With a DC500V Megger

☆Dielectric Strength:AC1500V 0.5mA 1S

☆Allowable Ambient Temperature Range:
–10℃ ~ +70℃(Operation)
–30℃ ~ +85℃(Storage)

★Dimensions Drawing(外观图）

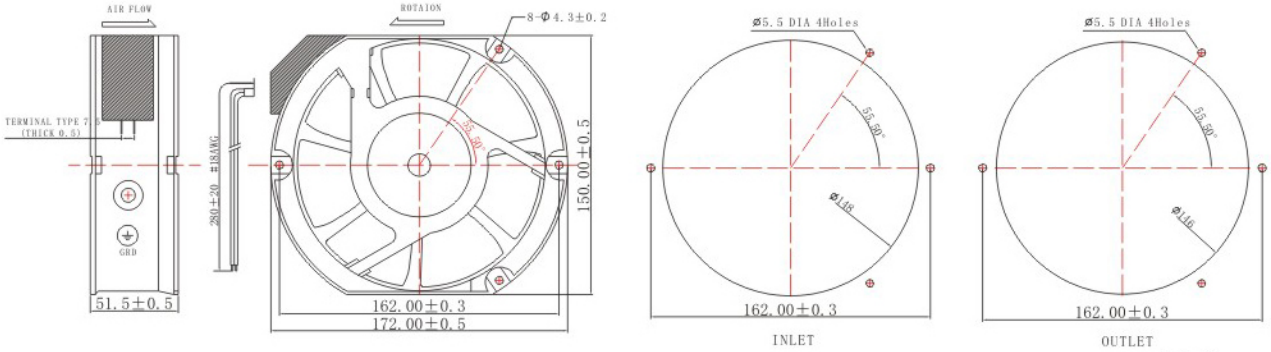

Unitl:mm

★Characteristic Curves(特性曲线）

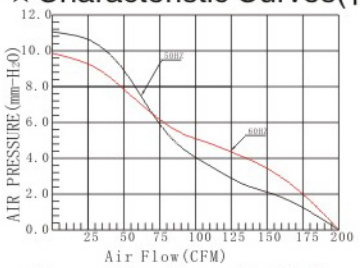

★Specifications(规格）

Model (型号)	Bearing System (培林)	Rated Voltage (V) (电压)	Freq. (Hz) (频率)	Current (A) (电流)	Input power (W) (功率)	Speed (RPM) (转速)	Air Flow (CFM) (风量)	Static Pressure (mm–H2O) (静压)	Niose Level (dB–A) (噪音)	Weight (g) (重量)
YA117251HSL	Sleeve	110	50/60	0.63/0.53	42/37	2400/2700	185/220	11.1/9.6	51/56	920
YA117251HBL	Ball	110	50/60	0.63/0.53	42/37	2500/2850	200/225	11.5/9.8	52/56	920
YA217251HSL	Sleeve	220	50/60	0.25/0.22	36/34	2400/2400	185/185	11.1/9.0	51/51	920
YA217251HBL	Ball	220	50/60	0.25/0.22	36/34	2500/2500	200/200	11.5/9.3	52/52	920
YA317251HSL	Sleeve	380	50/60	0.14/0.13	34/33	2500/2450	200/190	11.5/9.2	52/51	920
YA317251HBL	Ball	380	50/60	0.14/0.13	34/33	2500/2450	200/190	11.5/9.2	52/51	920